Electrolux PROFESSIONAL

SkyLine Premium Electric Combi Oven 6GN1/1 (Marine)

ITEM #

MODEL #

NAME #

SIS #

AIA #

227810 - 227820 - 227830

Short Form Specification

Item No.

Combi oven with digital interface with guided selection.
- Built-in steam generator with real humidity control based upon Lambda Sensor.
- OptiFlow air distribution system to achieve maximum performance with 5 fan speed levels.
- SkyClean: Automatic and built-in self cleaning system with integrated descale of the steam generator. 5 automatic cycles (soft, medium, strong, extra strong, rinse-only).
- Cooking modes: Programs (a maximum of 100 recipes can be stored); Manual (steam, combi and convection cycles); EcoDelta cooking cycle; Regeneration cycle.
- Automatic backup mode to avoid downtime.
- USB port to download HACCP data, programs and settings. Connectivity ready.
- Single sensor core temperature probe.
- Double-glass door with LED lights and double-step opening.
- Stainless steel construction throughout.
- Supplied with n.1 tray rack 1/1 GN, 67 mm pitch, with tray stopper.
- Flanged feet, door stopper (to be installed on site).

APPROVAL:

Main Features

- Digital interface with LED backlight buttons with guided selection.
- Built-in steam generator for highly precise humidity and temperature control according to the chosen settings.
- Real humidity control based upon Lambda Sensor to automatically recognize quantity and size of food for consistent quality results.
- Dry, hot convection cycle (25 °C - 300 °C): ideal for low humidity cooking.
- Combination cycle (25 °C - 300 °C): combining convected heat and steam to obtain humidity controlled cooking environment, accelerating the cooking process and reducing weight loss.
- Low temperature Steam cycle (25 °C - 99 °C): ideal for sous-vide, re-thermalization and delicate cooking.
  Steam cycle (100 °C): seafood and vegetables.
  High temperature steam (25 °C - 130 °C).
- EcoDelta cooking: cooking with food probe maintaining preset temperature difference between the core of the food and the cooking chamber.
- Pre-set program for Regeneration, ideal for banqueting on plate or rethermalizing on tray.
- Programs mode: a maximum of 100 recipes can be stored in the oven's memory, to recreate the exact same recipe at any time. 4-step cooking programs also available.
- Fan with 5 speed levels from 300 to 1500 RPM and reverse rotation for optimal evenness. Fan stops in less than 5 seconds when door is opened.
- Single sensor core temperature probe included.
- Automatic fast cool down and pre-heat function.
- SkyClean: Automatic and built-in self cleaning system with integrated descale of the steam generator. 5 automatic cycles (soft, medium, strong, extra strong, rinse-only).
- Different chemical options available: solid (phosphate-free), liquid (requires optional accessory).
- GreaseOut: predisposed for integrated grease drain and collection for safer operation (dedicated base as optional accessory).
- USB port to download HACCP data, share cooking programs and configurations.
  USB port also allows to plug-in sous-vide probe (optional accessory).
- Back-up mode with self-diagnosis is automatically activated if a failure occurs to avoid downtime.
- Capacity: 6 GN 1/1 trays.
- OptiFlow air distribution system to achieve maximum performance in chilling/heating eveness and temperature control thanks to a special design of the chamber.

Construction

- Double thermo-glazed door with open frame construction, for cool outside door panel. Swing hinged easy-release inner glass on door for easy cleaning.
- Hygienic internal chamber with all rounded corners

for easy cleaning.
- 304 AISI stainless steel construction throughout.
- Front access to control board for easy service.
- IPX 5 spray water protection certification for easy cleaning.
- Supplied with n.1 tray rack 1/1 GN, 67 mm pitch.
- Delivered with door stopper to be installed on site, predisposed for door opening 110°.

User Interface & Data Management

- Connectivity ready for real time access to connected appliances from remote and HACCP monitoring (requires optional accessory).
- Connectivity ready for real time access to connected appliances from remote and data monitoring (requires optional accessory – contact the Company for more details).

Sustainability

- Human centered design with 4-star certification for ergonomics and usability.
- Wing-shaped handle with ergonomic design and hands-free opening with the elbow, making managing trays simpler. Protected by registered design (EM003143551 and related family).
- Reduced power function for customized slow cooking cycles.

Included Accessories

1 of 4 flanged feet for 6 & 10 GN , 2", 100-130mm	PNC 922351
1 of Door stopper for 6 & 10 GN Oven - Marine	PNC 922775

Optional Accessories

External reverse osmosis filter for single tank Dishwashers with atmosphere boiler and Ovens	PNC 864388	❑
Water softener with cartridge and flow meter (high steam usage)	PNC 920003	❑
Water filter with cartridge and flow meter for 6 & 10 GN 1/1 ovens (low-medium steam usage - less than 2hrs per day full steam)	PNC 920004	❑
Water softener with salt for ovens with automatic regeneration of resin	PNC 921305	❑
Wheel kit for 6 & 10 GN 1/1 and 2/1 GN oven base (not for the disassembled one)	PNC 922003	❑
Pair of AISI 304 stainless steel grids, GN 1/1	PNC 922017	❑
Pair of grids for whole chicken (8 per grid - 1,2kg each), GN 1/1	PNC 922036	❑
AISI 304 stainless steel grid, GN 1/1	PNC 922062	❑
Grid for whole chicken (4 per grid - 1,2kg each), GN 1/2	PNC 922086	❑
External side spray unit (needs to be mounted outside and includes support to be mounted on the oven)	PNC 922171	❑
Baking tray for 5 baguettes in perforated aluminum with silicon coating, 400x600x38mm	PNC 922189	❑
Baking tray with 4 edges in perforated aluminum, 400x600x20mm	PNC 922190	❑
Baking tray with 4 edges in aluminum, 400x600x20mm	PNC 922191	❑
Pair of frying baskets	PNC 922239	❑
AISI 304 stainless steel bakery/pastry grid 400x600mm	PNC 922264	❑
Double-step door opening kit	PNC 922265	❑
Grid for whole chicken (8 per grid - 1,2kg each), GN 1/1	PNC 922266	❑
Grease collection tray, GN 1/1, H=100 mm	PNC 922321	❑
Kit universal skewer rack and 4 long skewers for Lenghtwise ovens	PNC 922324	❑
Universal skewer rack	PNC 922326	❑
4 long skewers	PNC 922327	❑
Volcano Smoker for lengthwise and crosswise oven	PNC 922338	❑
Multipurpose hook	PNC 922348	❑
4 flanged feet for 6 & 10 GN , 2", 100-130mm	PNC 922351	❑
Grid for whole duck (8 per grid - 1,8kg each), GN 1/1	PNC 922362	❑
Tray support for 6 & 10 GN 1/1 disassembled open base	PNC 922382	❑
Wall mounted detergent tank holder	PNC 922386	❑
USB single point probe	PNC 922390	❑
IoT module for OnE Connected and SkyDuo (one IoT board per appliance - to connect oven to blast chiller for Cook&Chill process).	PNC 922421	❑
Stacking kit for 6 GN 1/1 oven on electric 6&10 GN 1/1 oven, h=150mm - Marine	PNC 922422	❑
Wall sealing kit for stacked electric ovens 6 GN 1/1 on 6 GN 1/1 - Marine	PNC 922424	❑
Wall sealing kit for stacked electric ovens 6 GN 1/1 on 10 GN 1/1 - Marine	PNC 922425	❑
Tray rack with wheels, 6 GN 1/1, 65mm pitch	PNC 922600	❑
Tray rack with wheels, 5 GN 1/1, 80mm pitch	PNC 922606	❑
Bakery/pastry tray rack with wheels 400x600mm for 6 GN 1/1 oven and blast chiller freezer, 80mm pitch (5 runners)	PNC 922607	❑
Slide-in rack with handle for 6 & 10 GN 1/1 oven	PNC 922610	❑
Open base with tray support for 6 & 10 GN 1/1 oven	PNC 922612	❑
Cupboard base with tray support for 6 & 10 GN 1/1 oven	PNC 922614	❑
Hot cupboard base with tray support for 6 & 10 GN 1/1 oven holding GN 1/1 or 400x600mm trays	PNC 922615	❑
External connection kit for liquid detergent and rinse aid	PNC 922618	❑
Grease collection kit for GN 1/1-2/1 cupboard base (trolley with 2 tanks, open/close device for drain)	PNC 922619	❑
Stacking kit for 6+6 GN 1/1 ovens on electric 6+10 GN 1/1 GN ovens	PNC 922620	❑
Trolley for slide-in rack for 6 & 10 GN 1/1 oven and blast chiller freezer	PNC 922626	❑
Trolley for mobile rack for 2 stacked 6 GN 1/1 ovens on riser	PNC 922628	❑
Trolley for mobile rack for 6 GN 1/1 on 6 or 10 GN 1/1 ovens	PNC 922630	❑

The company reserves the right to make modifications to the products without prior notice. All information correct at time of printing.

- Riser on feet for 2 6 GN 1/1 ovens or a 6 GN 1/1 oven on base — PNC 922632 ❑
- Riser on wheels for stacked 2x6 GN 1/1 ovens, height 250mm — PNC 922635 ❑
- Stainless steel drain kit for 6 & 10 GN oven, dia=50mm — PNC 922636 ❑
- Plastic drain kit for 6 &10 GN oven, dia=50mm — PNC 922637 ❑
- Trolley with 2 tanks for grease collection — PNC 922638 ❑
- Grease collection kit for GN 1/1-2/1 open base (2 tanks, open/close device for drain) — PNC 922639 ❑
- Wall support for 6 GN 1/1 oven — PNC 922643 ❑
- Dehydration tray, GN 1/1, H=20mm — PNC 922651 ❑
- Flat dehydration tray, GN 1/1 — PNC 922652 ❑
- Open base for 6 & 10 GN 1/1 oven, disassembled - NO accessory can be fitted with the exception of 922382 — PNC 922653 ❑
- Bakery/pastry rack kit for 6 GN 1/1 oven with 5 racks 400x600mm and 80mm pitch — PNC 922655 ❑
- Stacking kit for 6 GN 1/1 combi oven on 15&25kg blast chiller/freezer crosswise — PNC 922657 ❑
- Heat shield for stacked ovens 6 GN 1/1 on 6 GN 1/1 — PNC 922660 ❑
- Heat shield for stacked ovens 6 GN 1/1 on 10 GN 1/1 — PNC 922661 ❑
- Heat shield for 6 GN 1/1 oven — PNC 922662 ❑
- Compatibility kit for installation of 6 GN 1/1 electric oven on previous 6 GN 1/1 electric oven (old stacking kit 922319 is also needed) — PNC 922679 ❑
- Fixed tray rack for 6 GN 1/1 and 400x600mm grids — PNC 922684 ❑
- Kit to fix oven to the wall — PNC 922687 ❑
- Tray support for 6 & 10 GN 1/1 oven base — PNC 922690 ❑
- Tray support with stopper for 6 & 10 GN 1/1 Oven Base - Marine — PNC 922691 ❑
- 4 adjustable feet with black cover for 6 & 10 GN ovens, 100-115mm — PNC 922693 ❑
- Open Base with tray support for 6 & 10 GN 1/1 Oven - Marine — PNC 922698 ❑
- Detergent tank holder for open base — PNC 922699 ❑
- Bakery/pastry runners 400x600mm for 6 & 10 GN 1/1 oven base — PNC 922702 ❑
- Wheels for stacked ovens — PNC 922704 ❑
- Mesh grilling grid, GN 1/1 — PNC 922713 ❑
- Probe holder for liquids — PNC 922714 ❑
- Odour reduction hood with fan for 6 & 10 GN 1/1 electric ovens — PNC 922718 ❑
- Condensation hood with fan for 6 & 10 GN 1/1 electric oven — PNC 922723 ❑
- Exhaust hood with fan for 6 & 10 GN 1/1 ovens — PNC 922728 ❑
- Exhaust hood without fan for 6&10 1/1GN ovens — PNC 922733 ❑
- Fixed tray rack, 5 GN 1/1, 85mm pitch — PNC 922740 ❑
- 4 high adjustable feet for 6 & 10 GN ovens, 230-290mm — PNC 922745 ❑
- Tray for traditional static cooking, H=100mm — PNC 922746 ❑
- Double-face griddle, one side ribbed and one side smooth, 400x600mm — PNC 922747 ❑
- Trolley for grease collection kit — PNC 922752 ❑
- Water inlet pressure reducer — PNC 922773 ❑
- Kit for installation of electric power peak management system for 6 & 10 GN Oven — PNC 922774 ❑
- Door stopper for 6 & 10 GN Oven - Marine — PNC 922775 ❑
- Extension for condensation tube, 37cm — PNC 922776 ❑
- Non-stick universal pan, GN 1/1, H=20mm — PNC 925000 ❑
- Non-stick universal pan, GN 1/ 1, H=40mm — PNC 925001 ❑
- Non-stick universal pan, GN 1/1, H=60mm — PNC 925002 ❑
- Double-face griddle, one side ribbed and one side smooth, GN 1/1 — PNC 925003 ❑
- Aluminum grill, GN 1/1 — PNC 925004 ❑
- Frying pan for 8 eggs, pancakes, hamburgers, GN 1/1 — PNC 925005 ❑
- Flat baking tray with 2 edges, GN 1/1 — PNC 925006 ❑
- Baking tray for 4 baguettes, GN 1/1 — PNC 925007 ❑
- Potato baker for 28 potatoes, GN 1/1 — PNC 925008 ❑
- Non-stick universal pan, GN 1/2, H=20mm — PNC 925009 ❑
- Non-stick universal pan, GN 1/2, H=40mm — PNC 925010 ❑
- Non-stick universal pan, GN 1/2, H=60mm — PNC 925011 ❑
- Compatibility kit for installation on previous base GN 1/1 — PNC 930217 ❑

Recommended Detergents

- C25 Rinse & Descale tab 2in1 rinse aid and descaler in disposable tablets for Skyline ovens Professional 2in1 rinse aid and descaler in disposable tablets for new generation ovens with automatic washing system. Suitable for all types of water. Packaging: 1 drum of 50 30g tablets. each — PNC 0S2394 ❑
- C22 Cleaning Tab Disposable detergent tablets for SkyLine ovens Professional detergent for new generation ovens with automatic washing system. Suitable for all types of water. Packaging: 1 drum of 100 65g tablets. each — PNC 0S2395 ❑

The company reserves the right to make modifications to the products without prior notice. All information correct at time of printing.

2024.10.08

SkyLine Premium
Electric Combi Oven 6GN1/1 (Marine)

Front

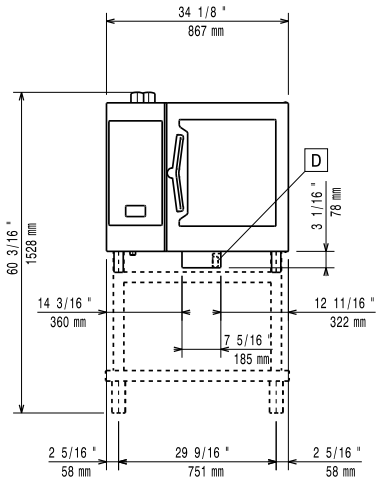

Side

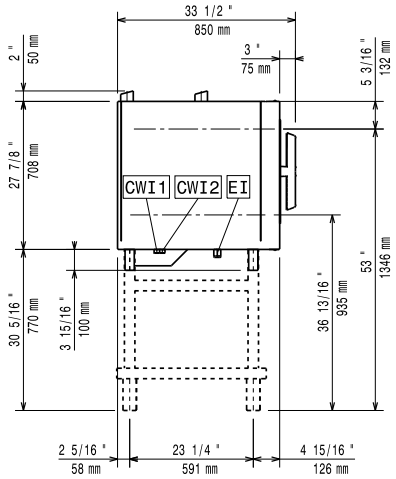

CWI1 = Cold Water inlet 1 (cleaning)
CWI2 = Cold Water Inlet 2 (steam generator)
D = Drain
DO = Overflow drain pipe
EI = Electrical inlet (power)

Top

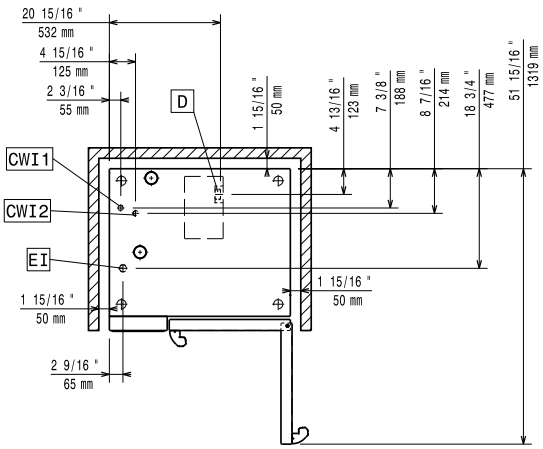

Electric

Supply voltage:	
227810 (ECOE61B2E0)	380-415 V/3 ph/50-60 Hz
227820 (ECOE61B2D0)	440 V/3 ph/50-60 Hz
227830 (ECOE61B2F0)	480 V/3 ph/60 Hz
Electrical power, default:	11.1 kW

Default power corresponds to factory test conditions.
When supply voltage is declared as a range the test is performed at the average value. According to the country, the installed power may vary within the range.

Electrical power max.:	
227810 (ECOE61B2E0)	11.8 kW
227820 (ECOE61B2D0)	11.5 kW
227830 (ECOE61B2F0)	11.1 kW

Water:

Water inlet connections "CWI1-CWI2":	3/4"
Pressure, bar min/max:	1-6 bar
Drain "D":	50mm
Max inlet water supply temperature:	30 °C
Chlorides:	<17 ppm
Conductivity:	>50 µS/cm

Electrolux Professional recommends the use of treated water, based on testing of specific water conditions.
Please refer to user manual for detailed water quality information.

Installation:

Clearance:	
227810 (ECOE61B2E0)	Clearance: 5 cm rear and right hand sides.
227820 (ECOE61B2D0)	Clearance: 5 cm rear and right hand sides.
Suggested clearance for service access:	
227810 (ECOE61B2E0)	50 cm left hand side.
227820 (ECOE61B2D0)	50 cm left hand side.

Capacity:

Trays type:	6 - 1/1 Gastronorm
Max load capacity:	30 kg

Key Information:

Door hinges:	
External dimensions, Width:	867 mm
External dimensions, Depth:	775 mm
External dimensions, Height:	808 mm
Net weight:	
227810 (ECOE61B2E0)	114 kg
227820 (ECOE61B2D0)	114 kg
227830 (ECOE61B2F0)	117 kg
Shipping weight:	
227810 (ECOE61B2E0)	131 kg
227820 (ECOE61B2D0)	131 kg
227830 (ECOE61B2F0)	134 kg
Shipping volume:	
227810 (ECOE61B2E0)	0.85 m³
227820 (ECOE61B2D0)	0.84 m³
227830 (ECOE61B2F0)	0.89 m³

ISO Certificates

ISO Standards:	ISO 9001; ISO 14001; ISO 45001; ISO 50001

The company reserves the right to make modifications to the products without prior notice. All information correct at time of printing.